WIPAIRE

WIPLINE FLOATS | MODIFICATIONS | AIRCRAFT SALES
AVIONICS | INTERIORS | MAINTENANCE | PAINT

SERVICE LETTER 279

13000 Bow Tie Bolt Replacement

Aircraft Makes/Model(s):	Float Model(s):	Compliance: Optional	By: MAS
DeHavilland DHC-6	13000 Series	Part Number: 1013058	Approved:DRH
		Date: 4/15/2026	Revision: B

PLOG OF REVISIONS		
Revision	Description	Date
A	Initial release	1/26/2026
B	Updated Figure 1.	4/15/2026

FAA approval has been obtained for technical data in this publication that affects STC or TSO design compliance.

EFFECTIVITY:

This service letter applies to all DHC-6 aircraft equipped with Wipaire model 13000 seaplane or amphibian floats.

COMPLIANCE:

Compliance is optional, recommended for aircraft docking in heavy seas or ocean environments.

BACKGROUND:

Bolts fastening the upper front drag wire fitting 13A02469-001 – the “bow tie” – have been found sheared, particularly on aircraft that spend prolonged time docked in rough waters. This bolt has since been updated to one of higher strength and with an increased radius under the head.

COMPLIANCE METHOD:

Replace 2 each bolts per aircraft as needed. Replacement bolt part number to be MS21250-06025 or MS21250-06026, depending on length required. Ensure countersunk washer MS20002C6 is installed under bolt heads. Refer also to install drawing 7D1-3008, Wipaire parts manual 1001021, and Wipaire service manual 1002548.

APPROXIMATE SHOP HOURS:

Replacing both bow tie bolts will take approximately 1 hour.

WARRANTY INFORMATION:

This service letter does not include warranty for labor or parts.

TECHNICAL DATA:

Copies of this service letter, associated service kit (if applicable), float service manual, and float parts manual are available at www.wipaire.com.

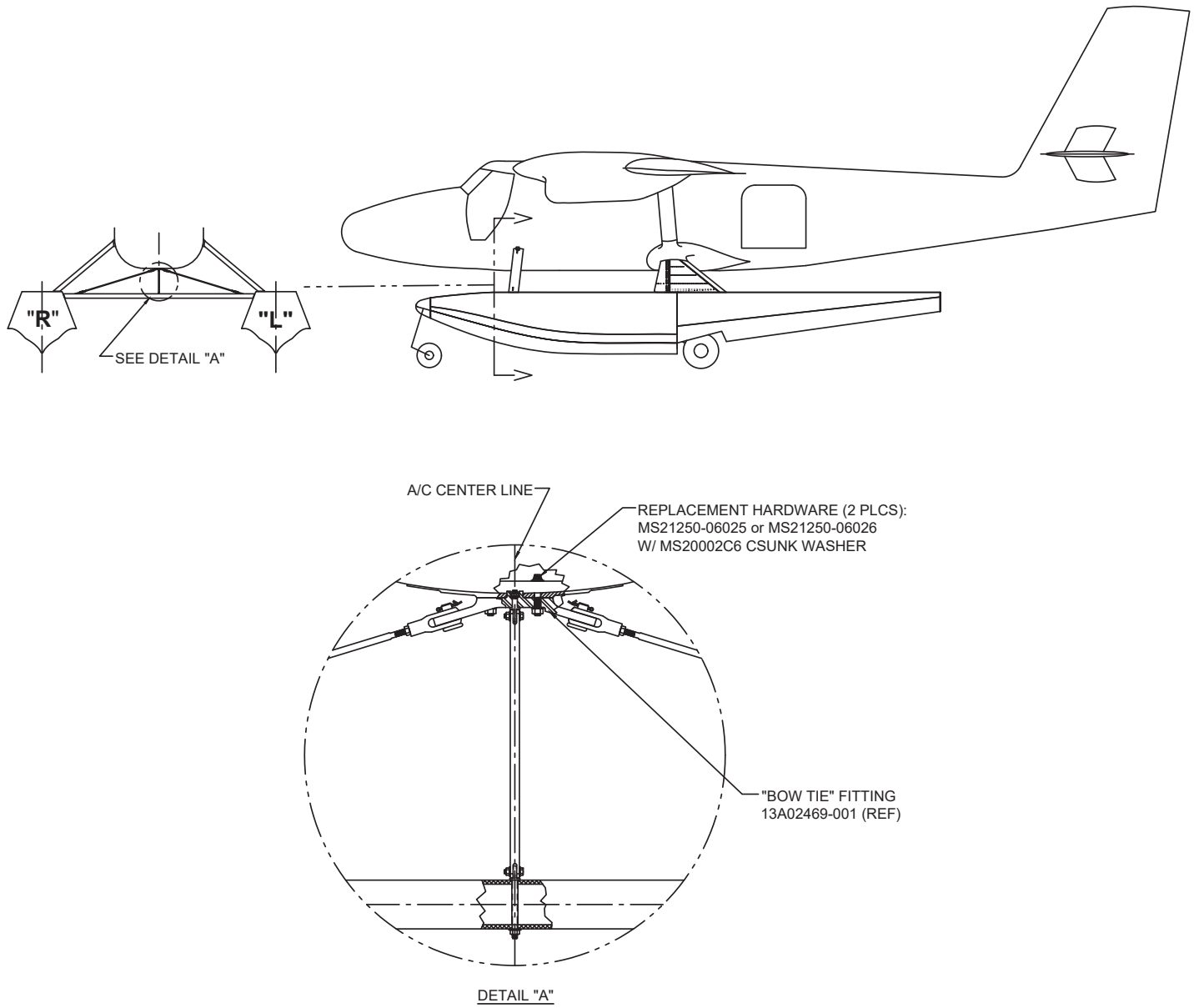

Figure 1 – Fitting Location

Aircraft Closing & Return to Service

1. Upon completion of inspection, enter information in Aircraft Logbook for completion of Wipaire Service Letter 279.